REVISION		
REV	DATE	DESCRIPTION
A	8/4/18	INITIAL

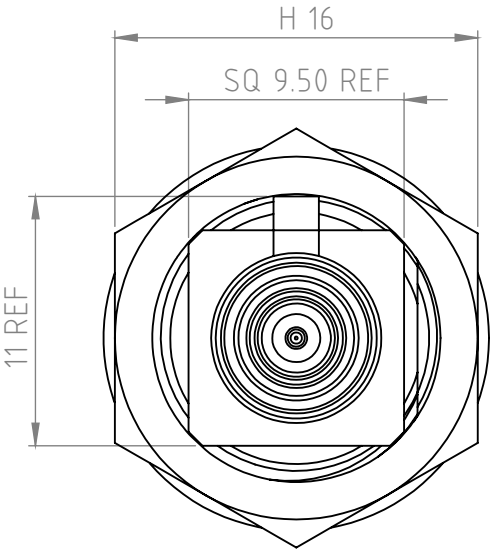

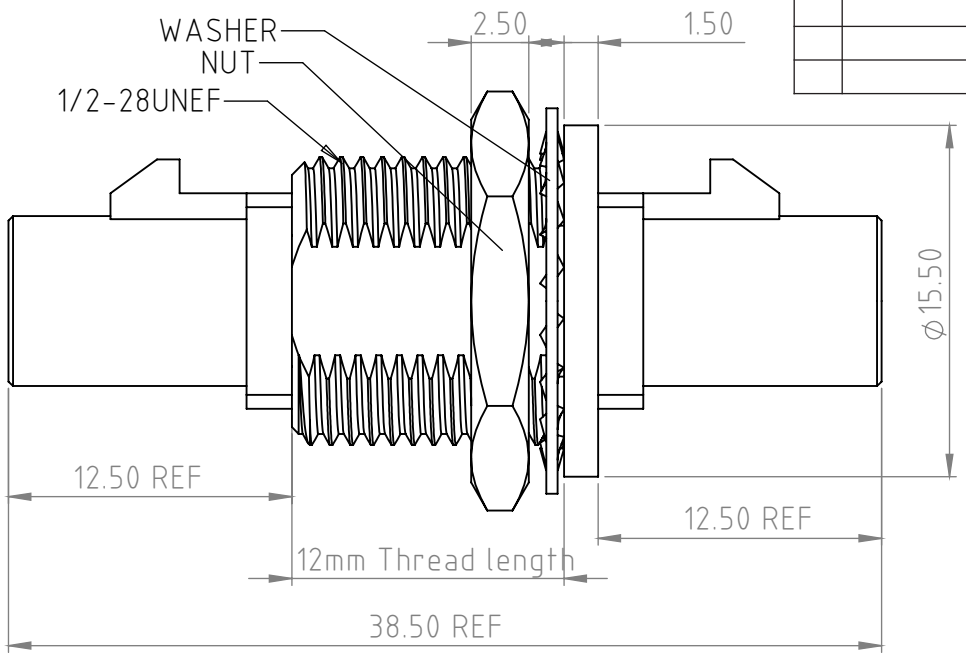

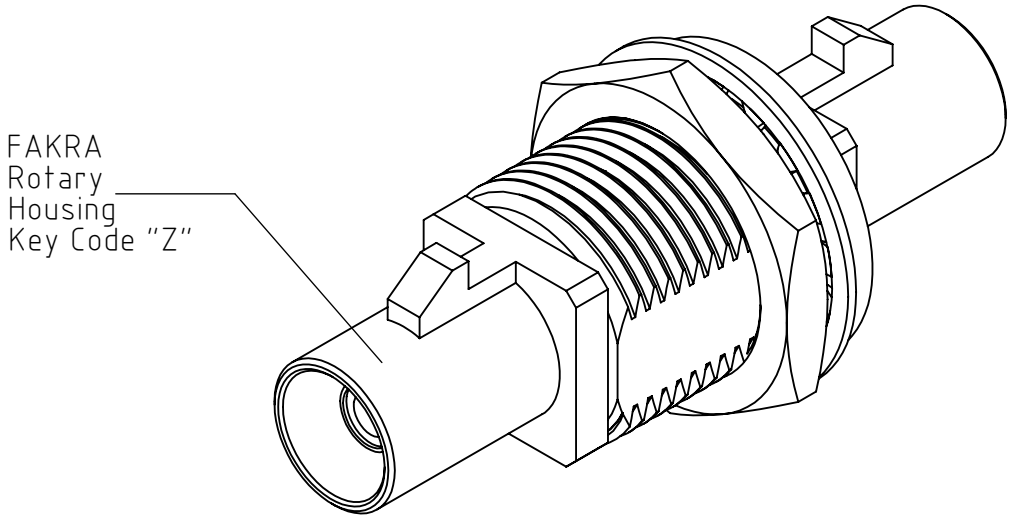

NO.	DESCRIPTION	MATERIAL	Q' TY	FINISH
9.	Washer	Brass	1	Nickel
8.	Nut	Brass	1	Nickel
7.	Housing	PA66	2	Water Blue
6.	Insulation	PTFE	2	White
5.	Insulation	PTFE	1	White
4.	Pin	Brass	1	Gold
3.	Pin	Brass	1	Gold
2.	Body	Brass	2	Nickel
1.	Body	Brass	1	Nickel

TOLERANCE
.X +/- 0.2
.XX +/- 0.1
.XXX +/- 0.05
ANGLE +/- 0.5

UNITS mm

RoHS Compliant

SCALE NTS

SIZE A

SHEET 1 OF 2

DRAWN BY:

CHECKED BY:

APPROVED BY:

PROPRIETARY AND CONFIDENTIAL
THE INFORMATION IN THIS DRAWING IS THE SOLE PROPERTY OF TCC INDUSTRIES, INC.. ANY REPRODUCTION IN PART OR AS A WHOLE WITHOUT THE WRITTEN PERMISSION OF TCC INDUSTRIES, INC. IS PROHIBITED.

CAD FILE
36-4R4R-36-Z-12-TGN

DESCRIPTION
Adapter, FAKRA Plug to FAKRA Plug
Code Z, 1/2" dia. x 12mm Bulkhead mount

TCC INDUSTRIES INC.
7050 Village Drive unit E, Buena Park, CA 90621-2282
Tel. 714.523.8885 - FAX. 714.562.0888
E-Mail: info@tccinc.com Website: www.tccinc.com