REVISION		
REV	DATE	DESCRIPTION
A	2/21/14	INITIAL

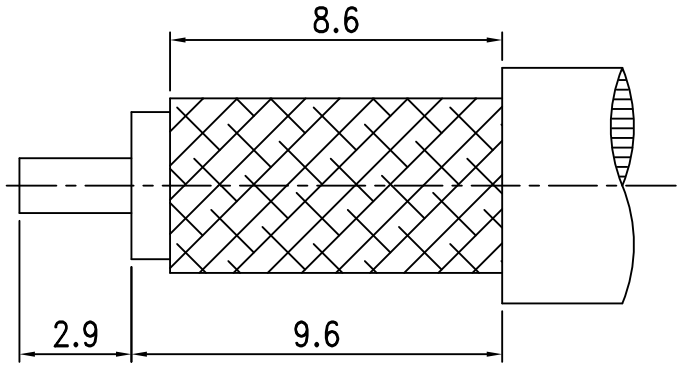

RECOMMENDED
CABLE STRIPPING DIM'S

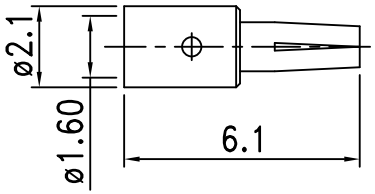

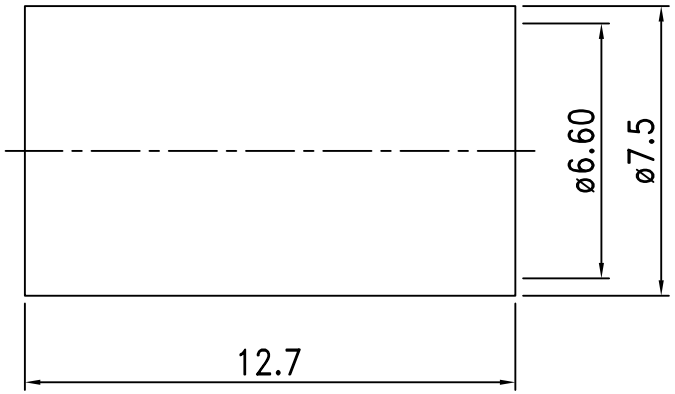

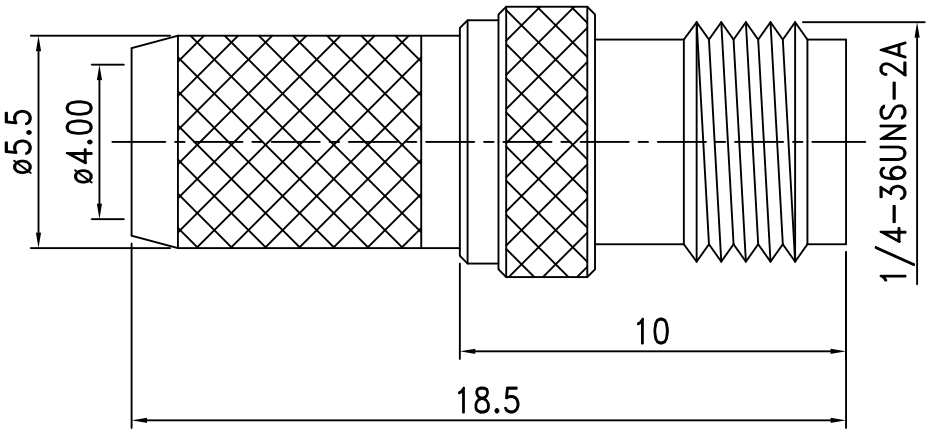

RECOMMENDED CRIMP DIE: 0.256" [6.5mm]

NO.	DESCRIPTION	MATERIAL	Q' TY	FINISH
4.	Ferrule	Brass	1	Nickel
3.	Insulation	PTFE	1	White
2.	Pin	Phosphor Bronze	1	Gold
1.	Body	Brass	1	Nickel

TOLERANCE		UNITS	RoHS Compliant	DRAWN BY:	CHECKED BY:	APPROVED BY:	CAD FILE
.X	+/- 0.2	mm					19-05L2-TGN
.XX	+/- 0.1	SCALE	SIZE	PROPRIETARY AND CONFIDENTIAL			DESCRIPTION
.XXX	+/- 0.05	NTS	A	THE INFORMATION IN THIS DRAWING IS THE SOLE PROPERTY OF TCC INDUSTRIES, INC.. ANY REPRODUCTION IN PART OR AS A WHOLE WITHOUT THE WRITTEN PERMISSION OF TCC INDUSTRIES, INC. IS PROHIBITED.			SMA MALE CRIMP FOR TCC CABLE GROUP "L2"
ANGLE	+/- 0.5	SHEET 1 OF 1					

TCC INDUSTRIES INC.
7050 Village Drive unit E, Buena Park, CA 90621-2282
Tel. 714.523.8885 - FAX. 714.562.0888
E-Mail: info@tccinc.com Website: www.tccinc.com